PENINSULA·ENGINEERING SOLUTIONS inc

no power lines | no shelters | no roads

just great microwave reliability.

RF-6000E/EW Repeater

General

	Output Power Options*	
	Power Level 1	Power Level 2
Frequency Range	5.925-7.125 GHz	5.925-7.125 GHz
Nominal Gain	40 dB (10 dB ALC)	40 dB (15 dB ALC)
Maximum Gain	50 dB (0 dB ALC)	55 dB (0 dB ALC)
AGC/ALC	10 dB down fade 5 dB up fade	15 dB down fade 5 dB up fade
Manual Gain Adjust**	0-15 dB	0-20 dB
Noise Figure	8 dB	8 dB
3rd Order Intercept	+34 dBm	+38 dBm
Antenna Ports	WR 137 WG	WR 137 WG
W/G Flange	CPR 137G	CPR 137G
Return Loss	>26 dB	>26 dB

Nominal Signal Levels

	Output Power Options* (at Antenna Ports)	
	Power Level 1	Power Level 2
FM/FSK/MSK	+24 dBm	+28 dBm
4 PSK	+22	+26
16 QAM	+18	+22
64 QAM	+14	+18
QPR3/9QPRS	+19	+23
QPR7/49QPRS	+18	+22
QPR9	+17	+21

Frequency Plan

	RF-6000E	RF-6000EW (6.4-7.1 GHz Only)
Channel Bandwidth	30 MHz, 1 dB	40 MHz, 1 dB
T-R Spacing	80 MHz, min.	100 MHz, min.
T-T Spacing (on common feeders)	57 MHz, min.	80 MHz, min.

* Duplex, delay-equalized configuration only.
** AGC/ALC range will be reduced by the amount equal to the reduction of maximum gain due to additional branch loss.

Channel Response

	RF-6000E (fo±15 MHz)	RF-6000EW (fo±20 MHz)
Amplitude	±0.5 dB	±0.5 dB
Group Delay (Equal)	4 ns/P-P	4 ns/P-P
Group Delay (Unequal)	0.065 ns/(MHz)^2	N/A

Power Requirements

	Output Power Options*	
	Power Level 1	Power Level 2
Nominal Voltage	+13.5 VDC	+13.5 VDC
Voltage Range	+11 to +16.5 VDC	+11 to +16.5 VDC
Current	2.3 A*	4.0 A*
Polarity	Neg. Ground	Neg. Ground

Environmental

Housing	Weathertight Aluminum
Ambient Temp.	-40°C to +60°C
Relative Humidity	90% (housing internal) 100% (housing external)
Altitude	15,000 feet (4600 meters)

Dimensions*

Height	30 inches (762 mm)
Width	27.5 inches (699 mm), with vent hoods
Depth	18 inches (457 mm)
Weight	50 lbs. (23 kg)

Reliability*

MTBF	85,000 hours
MTTR	30 minutes

Typical Configurations

Duplex
1+1 Frequency Diversity
2+1, 3+1 Multiline,
Dual-Polarized

FCC ID: EK 2A201

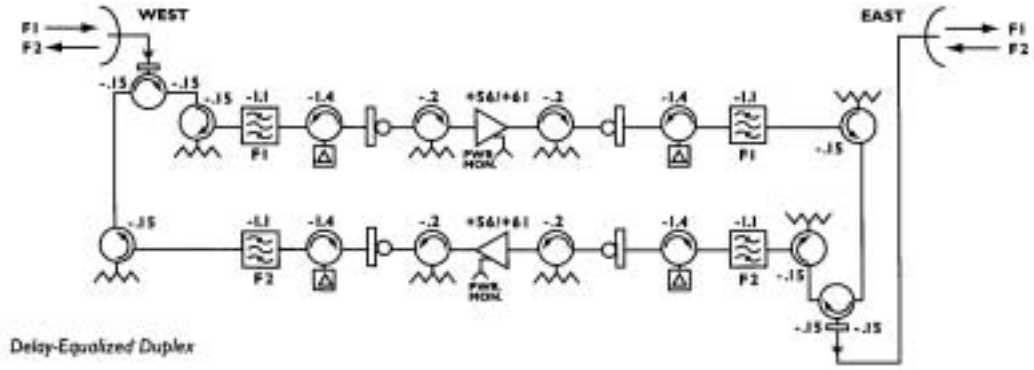

World Headquarters
39 Grand Canyon Lane
San Ramon,
CA 94583 USA

Phone
925.901.0103

Fax
925.901.0403

Peninsula Engineering Solutions, inc. may change specifications as necessary to meet industry requirements.

Website www.peninsulaengineering.com Email fmartens@peninsulaengineering.com

October 2001